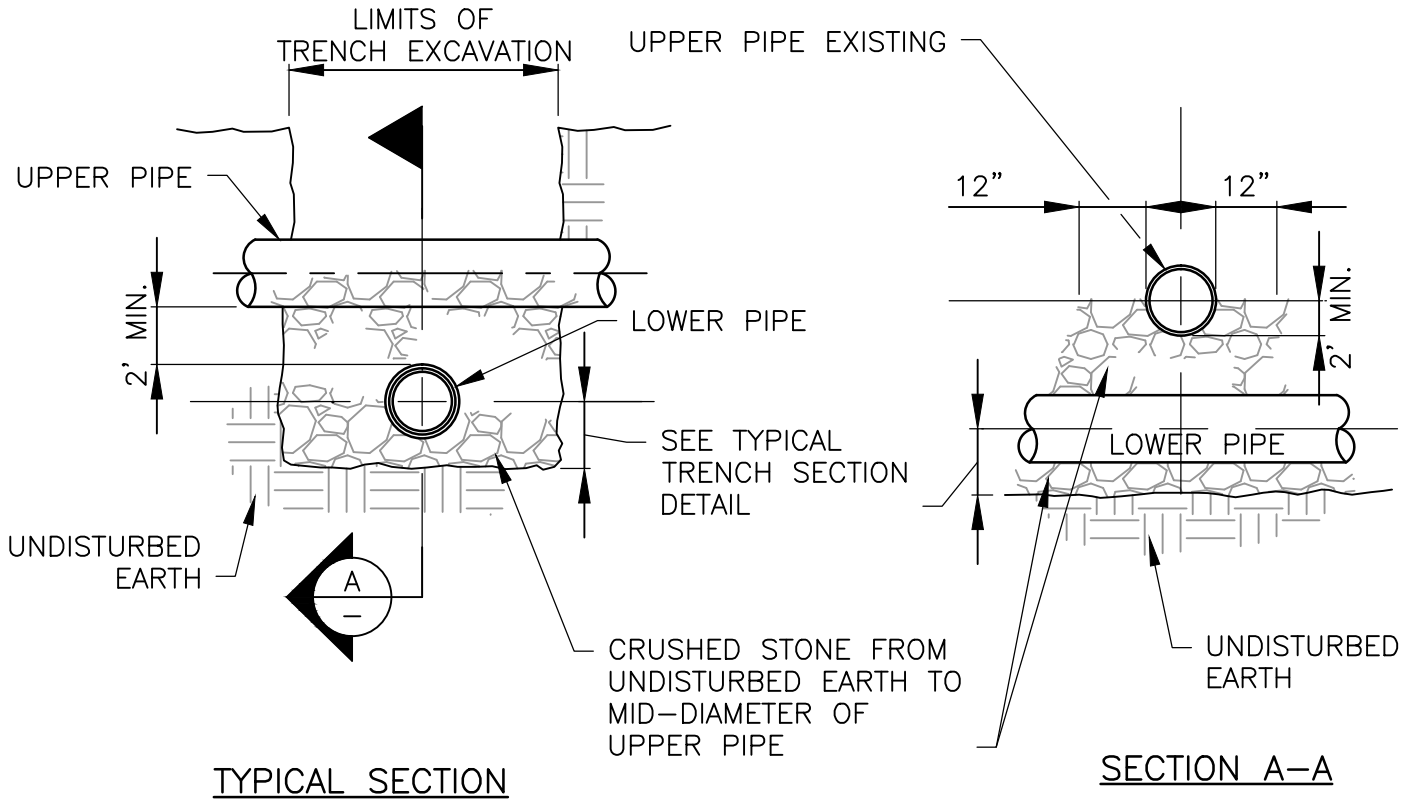

NOTES:

1. T.C.E.Q. RULES AND REGULATIONS ON SANITARY SEWER, STORM SEWER AND WATER MAIN CROSSINGS AND SEPARATIONS WILL BE STRICTLY ENFORCED, 30 TAC, CHAPTER 290, SUBCHAPTER D.
2. ALL OTHER UTILITIES TO MAINTAIN MINIMUM 5 FOOT HORIZONTAL AND 2 FOOT VERTICAL SEPARATION FROM WATER AND WASTEWATER MAINS AND SERVICES. GAS, ELECTRIC, CABLE, ETC. TO BE LOCATED OPPOSITE SIDES OF PROPERTIES.
3. UTILITY CROSSINGS SEPARATED BY LESS THAN 12 INCHES, PIPES SHALL BE ENCASED WITH 6 INCHES OF CONCRETE ALL AROUND AND CENTERED TO CROSSING FOR A MINIMUM LENGTH OF 20 FEET TOTAL.
4. SPECIFICATIONS: BEDDING MATERIAL MUST BE APPROVED BY AUTHORIZED T.C.W.C. AND I.D. NO. 17 DISTRICT PERSONNEL, BEFORE START OF JOB.
5. AT ANY CREEK CROSSING, THE MAIN SHALL BE STEEL ENCASED AND 6" CONCRETE ENCASEMENT TO WITHIN 10 FEET OUTSIDE OF CREEK OR DRAINAGE DITCH AREA.

TRAVIS COUNTY WATER CONTROL AND IMPROVEMENT DISTRICT No. 17 STANDARD DETAILS	UTILITY CROSSING	
ADOPTED: 03/01/2016	THE ARCHITECT/ENGINEER ASSUMES RESPONSIBILITY FOR APPROPRIATE USE OF THIS STANDARD.	DETAIL NO. W/WW07